# LCS Series 0.500” (12.7mm) 5mm Threaded Moisture Sealed Rigid Light Pipe

Notes

**1. Mounting:** Mounts in a Ø .312” ± .002” (Ø 7.92mm ± 0.051) panel hole on .500” (12.7mm) centers. Panel thickness .031” (.8mm) to .125” (3.18mm). Panel hole shall be deburred, but not chamfered.

**2. Assembly:** Insert lightpipe through the panel hole, slide lock washer onto lens barrel on lightpipe and twist on retaining ring. Slide PCB into position aligning LED with the end of the lightpipe unit.

**3. Material:** Lightpipe - Acrylic (Clear optical grade) UL 94-HB
Lens - Polycarbonate UL 94-V2
Seal - EPDM
Lock Washer - FH Steel, Nickel Plate
Retaining Nut - Thermoplastic (white) UL 94-V0

4. Meets NEMA 6P/IP 67 standards

5. Max torque nut should be tightened to is 1.8lb-in. (Product begins to fail at 3.2lb-in)

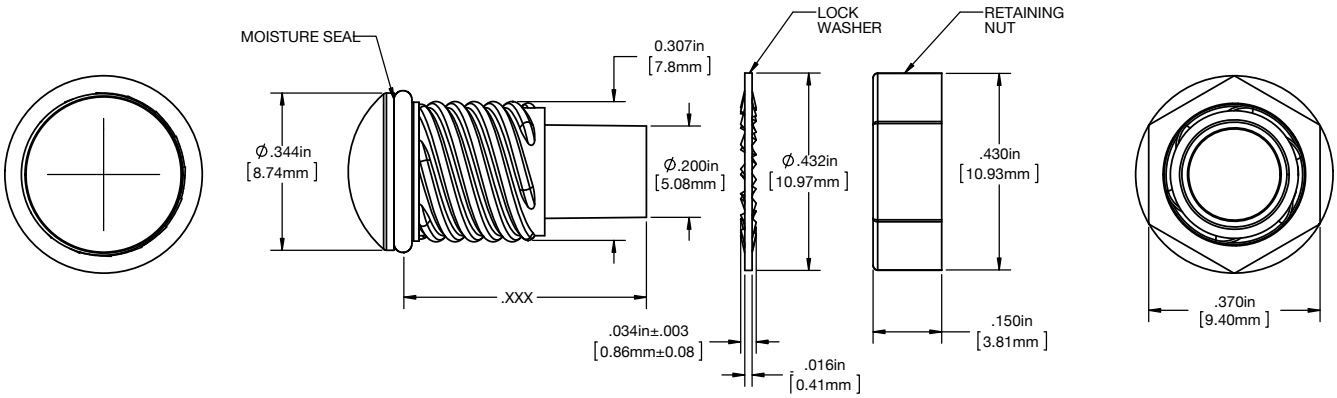


Ordering Code: LCS _ □□□ _ □□□

| Lightpipe | |
|---|---|
| | Length |
| 032 | .320” |
| 052 | .520” |
| 072 | .720” |
| 092 | .920” |
| 112 | 1.12” |
| 132 | 1.32” |
| 177 | 1.77” |

| Lens | |
|---|---|
| | Color |
| RTP | Red Transparent |
| ATP | Amber Transparent |
| GTP | Green Transparent |
| BTP | Blue Transparent |
| YTP | Yellow Transparent |
| CTP | Clear Transparent |

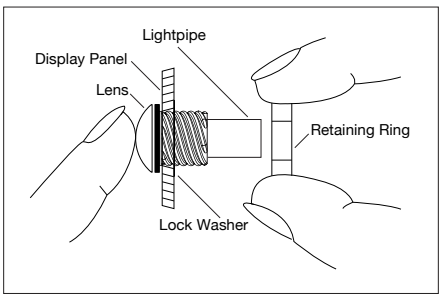


| Dimensions Style Inches [MM] General Tolerances Unless Otherwise Specified | | |
|---|---|---|
| | Inches | Length |
| .X | ± .020 | ± .508 |
| .XX | ± .015 | ± .381 |
| .XXX | ± .005 | ± .127 |
| Angle ± 1’ | | |
| Break All Corners And Sharp Edges .030 Max | | |

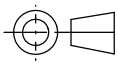

Third Angle Projection